Session V No. 1

Airflow Windows: Performance and Applications

K. Brandle R.F. Boehm, P.E.

ABSTRACT

Airflow window units are a combination of energy-efficient fenestration and adjustable shading device. They typically consist of a double-glazed outer sash and a single-glazed inner sash, with venetian or louvered blinds in between. Space air is admitted to the window cavity through a gap at the inner sash and may flow upward or downward. The air is then either exhausted through the outer window frame or returned via duct headers to the central air-handling equipment.

Energy savings and improvements of comfort conditions can be achieved from either of the airflow window types. The correct choice, however, requires a careful evaluation of window performance characteristics, local climate conditions, and space heating/cooling levels. Important parameters are, for example, the cavity airflow rate, the amount of exhaust air versus recycled air, the facade orientation, and the magnitude of heat gains in the space.

Both windows were tested simultaneously using a conventional double-glazed reference window. The window components and the test data are described, and results from yearly energy modeling are shown. Examples of airflow window installations in Europe and their operational characteristics are also discussed.

INTRODUCTION

Airflow windows are being used increasingly in central and northern Europe. They originated in Sweden where a related patent was filed in 1956. The first large-scale installation dates back to 1967 when the city of Helsinki used airflow windows designed by the EKONO Company in its Building Department offices.

Since the energy crisis of 1973, the energy savings potential of these windows has resulted in many applications, mostly in office buildings. In Europe there are now at least 50 large buildings and numerous small ones with airflow windows. In the United States, airflow-type windows have been used in several residential buildings,[1,2] and the first large building with airflow windows in this country, an office building, is currently under construction in Pittsburgh, Pennsylvania.

Airflow windows typically consist of a fixed, double-glazed outer sash and an operable, single-glazed inner sash, which generally is opened only to facilitate cleaning (see Fig. 1). Some systems allow for an operable outer sash also which permits window cleaning from the inside. A single-glazed outer sash seems appropriate for installations in very moderate or warm climates; however, the authors are not aware of any such installations. The two sashes are typically of aluminum and are separated by thermal breaks similar to those found in many window systems currently in use. At least one system consists of wood sashes with exterior aluminum cladding.

Either venetian or vertically louvered blinds are located in the air cavity between the outer and inner glazing. The blinds are operated manually at each window by simple pull or turning mechanisms. In large buildings a central, motorized control is sometimes used. Such a control, though expensive, has considerable advantages for energy conservation, because it permits continuous automatic adjustment of the blinds in response to solar radiation. This is important because building occupants seldom operate shading devices optimally, and over weekends and holidays blinds are usually unattended.

Kurt Brandle, AIA, College of Architecture and Urban Planning, The University of Michigan
Robert F. Boehm, P.E., Department of Mechanical and Industrial Engineering, University of Utah

In this country air conditioning of buildings in this country consumes a large amount of energy. Airflow windows offer excellent potential as a means of integrating sun-shading devices with fenestration, and therefore, reducing cooling loads. Because such windows appear to be a promising alternative to conventional window systems, the need to test them under U.S. weather conditions was recognized. The Building Environment and Energy Laboratory of the University of Utah was chosen to conduct these tests in a setting close to actual building applications.

A return-air window was built in Wisconsin according to the authors' specifications, and an exhaust-air window was imported from Switzerland. These windows were simultaneously tested with a high-quality reference window of the kind typically used in this country. Parameters of airflow windows that influence heating and cooling loads were determined. The performance over a year's time was modeled for Salt Lake City based on 1965 weather data, conditions for this year being close to typical.

WINDOW TYPES TESTED

Return-Air Window

Return-air windows introduce room air at the bottom frame. The opening at this frame is typically the width of the operable sash. The air flows upward through the cavity and returns via a duct system to the central HVAC equipment. The window, therefore, can be considered the first component of a conventional return duct system. Depending on fresh air requirments for building occupancy, part or all of this air is discarded and is replaced by outside air.

The test window consisted of a medium-bronze-colored aluminum frame with a thermal break. It was glazed with clear, 1/4-in. double-pane insulating glass outside and clear, 1/4-in. single glass inside. White venetian blinds were installed in the window cavity.

Exhaust-Air Window

Room air is introduced at the top frame. The air flows downward through the window cavity and is exhausted to the outside at the bottom frame. The openings at the top and bottom typically are the width of the operable sash. To keep outside air from entering the cavity, a check valve is located just inside the exhaust opening. It consists of a neoprene strip that closes the exhaust opening under back pressure from the wind.

The test window consisted of a natural-colored aluminum frame with a thermal break. It was glazed with clear, 1/4-in. double-pane insulating glass outside and clear, 1/4-in. single glass inside. A vertical louvered blind of white, opaque plastic was installed in the window cavity. The blind was adjustable from the inside.

Reference Window

Because airflow windows have been used mostly in commercial buildings, a commercial-type, fixed unit was installed as a reference window. It had a medium-bronze-colored aluminum frame, a thermal break, and clear, 1/4-in. double-pane insulating glass. An interior white venetian blind was installed at about a 2-in. distance from the inside glass surface.

TEST CONDITIONS AND WINDOW PARAMETERS

Testing procedures were guided by a primary objective: performance comparisons between air-flow windows and conventional windows were to be made side by side in the same environment. The details of the test facility and the testing procedures were described in an earlier publication.[3]

External and Internal Environmental Conditions

To develop conclusions on the performance of airflow windows in a wide range of climatic conditions, a broad range of test conditions was included. The major ones are variations in outside temperature, inside temperature and solar radiation. A summer and winter testing sequence provided the outside conditions in a natural setting ranging from very high to very low temperature and radiation levels.

There was no attempt to test the influence of wind, both because the site was shielded from wind and because wind velocities in Salt Lake City are low and uneven. Average wind velocities in Salt Lake City vary between 7.5 and 9.6 mph (12 and 15 km/h); however, velocities are generally much lower, with occasional strong gusts. Tests were performed when there was no discernible wind velocity, that is, when velocities were estimated to be less than 2 mph(3.2 km/h).

Another important environmental condition is humidity. Although all tests were performed in the local, low-humidity climate, temperatures on the inner surface of the double glazing of the airflow window were measured. These were used to establish conditions at which condensation might occur relative to relative humidity (RH) levels of the cavity air stream.

Parameters Related to Environmental Controls

The unique nature of airflow windows required the inclusion of two factors that either do not apply to conventional window systems or whose impact is considered separately from the function of the window system. These are the airflow rate through the window cavity and the position of the sun-shading device.

Air Flow Rates and Directions. Typical airflow rates used in Europe are 3 to 6 cfm per ft. (0.28 to 0.56 m^3/min per m) of window width. In typical exterior zones of office buildings with about 15- to 20-ft (4.50- to 6.00-m) zone depth, about 3 to 5 ft (1.00 to 1.50 m) of window width relate to one occupant (spatial requirement and adequacy of daylighting). Fresh air rates of 10 to 15 cfm (0.28 to 0.42 m^3/min) per person coincide with these window airflow rates. Three airflow and no-flow rates were also tested: 3.9, 5.4, and 7.7 cfm per ft (0.33, 0.50, and 0.72 m^3/min per m) of window width. These values, developed from specifics of measurement, closely cover the range of typically used airflows.

The air flows downward in the exhaust-air window type used in Europe. Nearly all return-air windows use an upward airflow. No important consequences for the winter and summer performance related to airflow direction were expected. This assumption, however, had to be verified by test runs. An exhaust-air window with downward flow and a return-air window with upward flow were tested under winter and summer conditions.

As with conventional windows, RH levels of the inside air must be watched with regard to condensation. During the winter season air flowing through the window cavity is cooled unless high levels of solar radiation are present. Depending on airflow direction, condensation may begin in either the upper or lower end of the cavity. The inside surface of the insulating glass is the critical surface. Temperatures of this surface were measured at low outside temperatures and at various flow rates to determine temperature levels at which condensation might occur. RH levels at which condensation actually did occur were not measured but were estimated from temperature measurements.

Sun-Shading Devices. A sun-shading device in the window cavity can be positioned to reduce the solar radiation directly entering the space. The device reflects part of the solar radiation outside and part inside. Another part is absorbed by the device and reradiated both outside and inside. With increasing airflow, a major part of the energy is carried away with the airstream.

Venetian blinds have the advantage of being excellent solar controllers and can be retracted completely when no sun shading is needed. They also reflect daylight toward the ceiling, which results in improved penetration of daylight into the space. Therefore, a typically available, white venetian blind with 1-in.-wide slats was chosen for the return-air window tests. The same type of blinds was used for simultaneous testing of the reference window with the same slat angles, but with the blind in a typical location of about 2-in. inside the insulating glass surface. The exhaust-air window was an imported product, with integral blinds of opaque white vertical louvers. The slat angle influenced the thermal and daylighting behavior of the blinds considerably. Three blind positions were tested in addition to completely retracted blinds: on the horizontal, at 30°, and at 45°.

It is generally not desirable to have full-beam sunlight strike a work area. Therefore, the blinds were adjusted into the test positions at angles that intercepted the direct-beam component. During periods of significant beam radiation on the windows, the blind-slat angles were set according to solar altitude angles for venetian blinds and to azimuth angles for vertical blinds. The same assumption was made in the computer model of yearly energy balance calculations for the airflow window and the reference window.

Interdependence of Airflow and Sun Shading. The energy balance of airflow windows is influenced considerably by the interaction of the airflow with the position of the sun-shading device. To develop basic parameters for a year-by-year energy balance analysis, the airflows and shading device positions noted above were varied, one by one.

Mean Radiant Temperature. The inside surface temperatures of airflow windows are influenced by the rate of cavity airflow. To calculate mean radiant temperatures, these surface temperatures must be available. They were determined in all test runs.

Parameters Related to Energy Flow

Accounting for the energy flow in airflow windows is much more involved than in conventional windows. This is due to the addition of the cavity airflow. The energy flow's potential impact on the space and the mechanical system must be considered. An additional publication will discuss the algorithms for assessing energy-flow components as well as the procedures for reducing data. A few remarks, however, on these components will facilitate the understanding of performance results.

The effective U-value accounts for the heat transfer, not including transmission of solar radiation, from the inner surface of the window assembly to or from the room. An additional value related to

conduction and convection only, the cavity-loss coefficient, accounts for energy loss or gain by the airstream in the cavity.

The effective shading coefficient consists of two or three parts, depending on the airflow type. The first part, RB, is the ratio of directly transmitted solar radiation to the irradiation of the outside window surface and is sometimes called transmissivity. The second part, H_1, is the ratio of radiation indirectly transmitted, that is, reradiated or convected into the room. A third part, H_2, is the ratio of radiation transferred to the cavity airstream. This third part is not applicable to the exhaust-air window, because all cavity air is exhausted. It is important, however, for evaluating the performance of the return-air window.

The energy balance of airflow windows can be calculated using the parameters described above. It should be kept in mind that energy balance means the net effect of the window under consideration on the central HVAC equipment which holds the thermal environment of the building in steady state. This implies not only consideration of the window as a barrier between the inside environment and outdoors, but also the impact of the airflow on energy consumption.

TEST RESULTS

The value ranges for the above mentioned energy flow components were developed from hundreds of recordings. Data reduction yielded the following major results. Detailed results have been reported elsewhere.[4]

The effective U-values decreased from 0.25 to 0.18 Btu/hr·ft^2·°F (1.42 to 1.02 W/m^2·K) with increasing airflow from 0 to 8 cfm per ft (0 to 0.74 m^3/min per m) of window width. The cavity loss coefficient, also related to ft^2 (m^2) of window surface, increased from 0 to 0.3 Btu/hr·ft^2·°F (0 to 1.7 W/m^2·K) with increasing airflow from 0 to 8 cfm per ft (0 to 0.74 m^3/min per m) of window width.

The range of variations in the test results for the return-air and the exhaust-air window was very narrow. Slightly higher effective U-values were observed for the return-air window than for the exhaust-air window. Slightly lower cavity loss coefficients were observed for the return-air window. Variations in blind-angle setting did not influence the effective U-value until the blinds were completely closed. Tight closure was not possible with commercially available venetian blinds. Tightly closed louvered blinds produced effective U-values of 0.12 to 0.09 Btu/hr·ft^2·°F (0.68 to 0.51 W/m^2·K). No variations in the cavity loss coefficient related to blind settings could be observed while the blinds were in the window cavity. When the blinds were retracted, however, a very slight decrease was noticed.

Airflow does not influence the reduction of solar energy transmission caused directly by the radiation barriers, i.e. the glass and the shading device. The reduction coefficients, RB, are shown in Tab. 1. At first glance, these values may appear to be rather low. However, they contain only the directly transmitted (not reradiated) radiation component which is only part of the conventionally used shading coefficient. These values also are averages of rather large variations in sun angles with respect to those normal to the glass surface, where transmission tends to decrease rapidly with angle at very large angles of incidence.

The ratio of energy reradiated and convected to the room, H_1, compared to the solar input decreased in value with increasing airflow. These values range from 0.14 to 0.8 for airflows of 0 to 8 cfm per ft (0 to 0.74 m^3/min per m) of window width for the return-air window. They were slightly higher for the exhaust-air window. Varying blind positions did not cause much variation in the parameter H_1. This can be explained by the fact that the surface area of the blinds reached by solar radiation is basically constant, independent of blind setting angles, as long as the blinds are closed enough to block direct radiation. Therefore, absorption and reradiation of glass and blinds vary little.

The ratio of solar radiation absorbed in the cavity air stream, H_2, compared to the solar input increased for both window types from 0 to 0.15 for airflows from 0 to 8 cfm per ft (0 to 0.74 m^3/min per m) of window width. No variations were observed relative to changes in blind-angle setting. When the blinds were retracted, about 20 percent lower values were observed.

The U-value of the reference window did not show any appreciable relationship to the slat tilt of the blinds until the blinds were closed as tightly as possible. The average U-values were found to be 0.55 Btu/hr·ft^2·°F (3.12 W/h·m^2·K) for open blinds, and 0.43 (2.44) for tightly closed blinds.

The shading coefficient of the reference window with the venetian blinds retracted averaged 0.57. With blinds set at various slat tilts, the average was 0.44 from scattered data between 0.37 to 0.49. These values for open blinds are slightly lower and for closed blinds are slightly higher than those one would expect in making comparisons with conventional shading coefficients of double-glazed windows. Consider in this context that these values are normalized to irradiation of the outside vertical surface and not to

radiation after transmission through one pane of glass, as they are conventionally given.

Fig. 2 shows the humidity limits of the space air above which condensation may occur in the window cavity. These limits are lower than those for conventional double glazing, because the temperature of the middle glass inside surface is lower than the inside of conventional double glazing. At higher flow rates than those tested, the glass surface temperatures will approach levels of conventional double glazing at room-air conditions. This surface-temperature drop of airflow windows increases with the height of windows. In cold climates, rooms with unusually high RH levels, i.e., above about 40%, should either receive higher cavity airflow rates than those tested or triple glazing should be applied for the outer part of the cavity. The latter was specified, for example, for the computer room of the German Texaco Building in Hamburg, West Germany, where a RH of 50% was to be maintained.

Fig. 3 shows the surface temperatures of the inside glass surface of the airflow window at various airflows. Compared with conventional double-glazed or triple-glazed windows, these results lead to considerable improvements in mean radiant temperature conditions. This fact may be an important consideration in buildings in which high levels of comfort and large windows are required, as for example, in patient rooms in hospitals.

PERFORMANCE MODELING RESULTS

Only heat gain or heat loss will happen across a window at a particular time. Over the course of a day or a month, however, both heat gain and heat loss will occur. These loads should not be tradedoff against each other, because considerable distortions of actual performance would develop. Therefore, all performance modeling results are shown as simulations of positive and negative hourly energy balances (heat gains and losses). Special HVAC systems may accept functions that allow tradeoffs, for example, through energy shifting in buildings, when heat gains and losses occur simultaneously, or through energy storage.

For the following discussion reference is made to the graphs from Fig. 4-8. These give data for transmission gains and losses on south and west orientations, for energy required to treat recycled air and for energy required to treat make-up air. Positive values represent heat gain; negative values represent heat loss. The tests showed only very small differences in heat losses and gains for the two types of airflow windows. Therefore, the simulations are based on the assumption that the heat gains and heat losses of the exhaust-air window and the return-air window are the same, i.e., QEA = QRA. The fate of the exhaust air or return air and the associated energy are not being considered. Figure 4 shows the performance of the test window (QEA or QRA) and the reference window (QREF) for the south orientation at 4 cfm/ft (0.37 m^3/min per m) of window width. The graph shows an annual improvement for the airflow window versus the reference window of about 60% for heating and about 55% for cooling. Heat losses and heat gains are separated, since totals do not represent window energy balance.

An increase of cavity air flow from 4 to 6 cfm per ft (0.37 to 0.56 m^3/min per m) slightly improves the efficiency. The improvement amounts to 12% for the largest heating load and 5% for the largest cooling load at a southerly orientation.

Fig. 5 shows the performance for the west orientation at 4 cfm per ft (0.37 m^3/min per m). The performance in heating is obviously very similar to that found for the south orientation. The improvement in performance of the airflow window versus the reference window related to cooling load is about 58%.

The values described above are the heat gains and losses to and from the interior environment, not considering energy in the airflow. This flow must be considered, however, for comprehensive performance comparisons. Figures 6 and 7 show, for example, associated heat losses at partial or total replacement of the cavity air for fresh air fractions, FR, 1.0, 0.75, 0.5, and 0.25. The fraction is always 1.0 for the exhaust-air window, because all cavity air is exhausted and must be replaced. It may also be 1.0 for the return-air window, if the fresh air requirement of the exterior building zone is equal to or larger than the cavity airflow and all cavity air is exhausted, that is, not recycled by the central equipment. If all window cavity air is recycled, the fresh air fraction is zero. In the case of a return-air window with a fresh air fraction smaller than 1.0, one must add the energy required (QRC) to treat that part of the cavity air that will be recycled. Fig. 8, for example, shows associated heating loads. The energy needed for treating this recycled air is in the case of a Salt Lake City winter, considerably smaller than the energy needed for treating fresh air.

During summer months when there is no heating required, there are small negative values, representing transmission heat loss. This is due to the static temperature setting in the computer model of 78°F (25.5°C) during the summer months. Salt Lake City experiences considerable temperature swings during summer and temperatures often fall below 78°F (25.5°C). The winter setting is at 68°F (20°), which may contribute to small gains when the outside temperature is above this level. In comparing the overall performance of the window, these small losses and gains are negligible.

Monthly Summary Samples

For a better understanding of overall window performance, the loads from window heat gain/heat loss, from treatment of recycled air, and from treatment of fresh air are added. For example, a fresh air fraction of 0.75 for the return-air window and the reference window, the monthly summaries in Tab. 2 are obtained. Negative values represent heat losses. Positive values represent heat gains.

These values show large energy savings for the airflow windows versus the reference windows. Because of the fresh air fraction, which is assumed to be 0.75, the return-air window performs considerably better than the exhaust-air window in January (heat loss), but not as well in October (south, heat gain) and July (west, heat gain). For October, this is due to the utilization of outside air which has a lower temperature than the inside air. For July, the difference between the outside air and the inside air is smaller than the difference between the return air from the return-air window and the inside air, which causes more energy to be consumed for treatment than for cooling fresh air from outside.

The difference between energy consumed for treating return air and that consumed for treating outside air goes beyond the window performance itself. Also, one should remember that the values described in Tab. 2 relate to the hot and arid climate of Salt Lake City. In other places, especially where temperature and humidity levels are considerably different, the heating and cooling loads from make-up air will be quite different.

Yearly Summary Samples

Tab. 3 shows the yearly heat losses at a south orientation for the exhaust-air, return-air, and reference windows. With all return air exhausted and without application of an energy recovery system, both the exhaust-air window and the return-air window have at a fresh air fraction of 1.0 about 22 percent lower heat losses than the reference window. If the return-air exhaust rate is 75% (FR = .75), then the exhaust-air window is about 7% and the return-air window about 24% lower than the reference window. At about 50% return-air exhaust rate, the heat loss of the exhaust-air window is 13% higher and the return-air window is 26% lower than the reference window. The same trend holds for other window orientations.

Tab. 4 shows the yearly heat gains for a south orientation. With a fresh air fraction of 1.0, the airflow windows have a 59% lower heat gain than the reference window. With a fresh air fraction of 0.5, the return-air window is about 12% less efficient than the exhaust-air window. Similar relationships exist for other orientations, such as the west orientation shown in Tab. 5.

This only slightly better performance of the exhaust-air window versus the return-air window in summer and the considerably better performance of the return-air window in winter, may lead to a decision in favor of the return-air system. Consideration of internal heat gains, however, may change such a decision.

If one uses the rather low amount of 3 W/ft^2 of internal heat gain (people, lighting, equipment), a 20 ft (6-m) deep exterior building zone will, at a 4 ft (1.22-m) window width, produce a gain of 818 Btu/h (240 W). For 9 work hours and a 5-day work week, a gain of 1.914×10^6 Btu (2.020 GJ per year) will occur. This load, which develops mostly during daytime, will slightly counterbalance the losses in winter, but will contribute substantially to summer cooling loads in buidings with the reference or the return-air windows at a fresh air fraction lower than 1.0. The exhaust-air window will directly discard this load with the cavity air.

AIR-FLOW WINDOW APPLICATIONS AND RELATED COMMENTS

The installed cost of airflow windows is 30 to 50% more than that of double-glazed conventional windows with interior shading devices. Although energy conservation has been the major justification for this additional cost, other features and their implications should be considered as well.

Architectural Design

Airflow windows are most suitable for buildings that are designed with a large window-to-opaque-wall ratio, for example, in buildings for which large daylight contributions are desired. Although airflow windows have been used in many building types, their major application has been in office buildings. The appearance of buildings with airflow windows and facades is basically the same as that of conventional buildings, except for sun shading.

Exterior shading devices, which should be used in conventional fenestration, change the appearance of buildings considerably and have not been popular in this country. They also may not be applicable in tall buildings or in areas with high wind conditions. In airflow window systems, sun-shading devices are located between the glass panes. Thus, they function like interior blinds but without their thermal disadvantages. The solar energy absorption in the cavity of air-flow windows is a desired effect, because it allows convective transport of the collected energy to the outside, to the central HVAC system, or even to

storage for later use.

The shading device in the window cavity must be adjusted periodically to exclude unwanted solar radiation. Because of the small solar altitude changes from day to day at south orientations, venetian blind-slat angles may be adjusted as infrequently as monthly. Vertical blinds must be adjusted several times in the course of a day. At east and west orientations, one or two adjustments are required each morning and afternoon for both types of shading. These adjustments can be made manually by the occupants, just as with inside blinds, or automatically by a minimotor with radiation sensors, appropriate controls, and manual override.

Facade orientations evolve mainly from particular site restrictions and from functional building requirements. Because airflow windows respond favorably to solar impact, such windows lend themselves very well to installations for which extensive east/west fenestration is unavoidable or the same facades are desired for all orientations.

Fig. 9 and 10 show the Kloeckner Office Building in Duisburg, West Germany. All facades consist of return-air windows with white louvers as shading devices.

Comfort Conditions and Space Utilization

During winter, inside window surfaces are colder than the air temperature in the room. This temperature difference creates air currents and sometimes drafts within short distances from the window. These lower temperatures also create radiant conditions too asymmetrical for thermal comfort, even at considerable distances from windows.

At an inside temperature of 70°F (21°C) and an outside temperature of 32°F (0°C), conventional double-pane insulating glass has a temperature difference from room to window surface of 14°F (7.8°C) and triple-pane glass a difference of 10°F (5.6°C). Airflow windows at a typical cavity airflow of 4 cfm/ft (0.37 m^3/min per m) of window width yield a difference of only 5°F (2.8°C). At such a small difference, resulting air currents are too small to be perceived as drafts. Therefore, airflow windows are especially suited to clinics and hospitals.

Comfort conditions often are impaired by high heat gains from solar radiation. Interior venetian blinds, though they shade against direct solar exposure, cannot prevent the greenhouse effect and thus reradiate part of the absorbed energy to the room. With blinds in the airflow window cavity, the reradiation impact is reduced. Most of the absorbed energy is transported away by the cavity air stream.

The blinds in an airflow window can be completely retracted at times of low outside light levels, thus allowing maximum utilization of the available daylight. When sun shading is needed, the light-colored venetian blinds permit deep penetration of daylight into the space while effectively excluding most of the direct sunlight. The daylight-factor curve into the depth of a space is generally much flatter than at open-window light.

Because of the favorable thermal and lighting conditions, work areas may be placed directly at the inner facade surface, thus enhancing space utilization. This option is supported by the fact that terminal HVAC components, such as radiators or air induction units, are rarely located at the sills of airflow windows. The application of airflow windows reduces the peak heat loss and heat gain in comparison to windows with double-insulating glass and interior venetian blinds. Smaller duct sizes and smaller central HVAC equipment save vertical and horizontal space.

Impact on HVAC Systems

Airflow windows, as mentioned, require smaller HVAC systems, permitting better space utilization. Reductions in related HVAC system costs may be tradedoff against higher costs of air-flow windows compared with conventional window systems. In many applications the total airflow through the building may be reduced because of lower peak heat losses and heat gains. Thus, the sizing of air distribution systems, even in buildings with large envelope-to-volume ratios, may be governed by occupant air change requirements or internal heat gains rather than envelope loads. Airflow windows mainly influence the HVAC systems for the exterior zones of buildings, which are typically assumed to have a depth of about 20 to 30 ft (6 to 9 m). Because of the smaller temperature difference between room air and the inside window surface as compared with that of conventional window systems, the air supply outlets need not be located close to the window wall.

For exhaust-air windows, pressurization of the building is necessary to overcome the resistance of the window and its air check valve which protects against outside wind pressures. Room air pressures of about 0.04 inch H_2O at 4 cfm per ft (10 Pa at 0.37 m^3/min per m) of window width have been reported as adequate. Return-air windows require about one quarter of that pressure for proper functioning. They may be considered part of the return duct systems in the exterior zones of the building. In a Swedish

application, the return-air window is integrated with duct systems for cooling lighting fixtures. In a Finnish system, the windows are connected with hollow-core concrete slabs for thermal storage.

Internal zones of buildings are normally not influenced by airflow window applications. However, in open spaces, such as office landscaping where exterior and interior zones are not separated, part or all of the return air from the interior zone may be used for window cavity air supply. In buildings with large interior zones and with physical separations, such zones obviously must have their own return system.

Energy recovery systems can considerably reduce energy consumption for heating and cooling. With exhaust-air windows this function does not come into play, because most or all of the air from the exterior building zone is usually discarded directly through the windows. Actually, the exhaust-air window may be considered a type of energy-recovery system because it reduces room heating and cooling loads by using exhaust air. If the minimum flow rate of cavity air is less or about the same as that of fresh air for the exterior zone, then the exhaust-air window is highly efficient because there is little or no return airflow through the conventional return-air system. In special cases this system may even be omitted. A building with such a system has been operated satisfactorily in Switzerland for about 6 years. (Fig. 11).

The larger the minimum cavity airflow rate is, compared to the fresh air rate of the exterior zone, the more efficient is the return-air window. The air that is not discarded is treated in the central HVAC system before recycling. Energy recovery can be applied to the discarded portion. The larger the overall exhaust-air portion of the total building airflow, the more favorable the application of energy recovery.

In cases in which heating and cooling loads often occur simultaneously, recovery may be used for energy savings through "load shifting" from one part of the building to another. Under favorable solar radiation conditions, return-air windows will function as collectors and will provide rather easily transported solar gain for heating elsewhere, with or without intermediate energy storage.

A combination of airflow windows with small energy recovery units is now being marketed by a Swiss company (Fig. 12). A rotation air valve allows the window to function as either an exhaust-air or a return-air window. Two small fans with a layered steel box for counter-flow provide in the exhaust mode a capability to transfer heat from exhaust air to incoming air or vice versa.

CONCLUSIONS

Airflow windows, increasingly used in Europe, have shown promising energy savings in testing and yearly performance modeling. Following are the major conclusions from this work:

1. The yearly energy balance across the windows, that is, transmission losses or gains between the outside and the exterior zones of a building, is 30 to 60% in favor of airflow windows, compared to conventional, high-quality windows.
2. The mean radiant temperatures in spaces with large window walls will be favorably influenced in winter and summer by the installation of airflow windows, because the inside surface temperatures they yield will be considerably closer to room air temperatures than those yielded by double-glazed, or even triple-glazed, windows.
3. Condensation from room air humidity may occur on the cavity side of the outer insulating glass pane of airflow windows at slightly higher room air temperatures than it does on the room side of conventional insulating glass.
4. Airflow windows are effective in reducing heat losses and heat gains. It is crucial, however, to consider the disposal or reutilization of cavity air with its impact on the total energy balance, including transmission losses. Both the sensible and the latent heat content of the exhaust-air/return-air must be considered.
5. A general statement regarding the choice between return-air windows versus exhaust-air windows cannot be made based on window testing alone. Other factors related to a particular building's functions and HVAC system, such as occupancy load, artificial lighting level, air change rate, and energy recovery equipment, will play important roles in the decision to choose one of the two window types.
6. Airflow windows allow an architecturally favorable integration of energy-saving shading devices in the plane of the facade. The shading devices are at the same time effective daylight and glare controls.
7. The higher cost of these windows must be evaluated against first-cost and life-cycle cost tradeoffs from lower costs of HVAC systems and from energy savings. Such tradeoffs may vary considerably from project to project because of site, climate, building function and building configuration.

NOMENCLATURE

FR, outside air fraction
H_1, fraction of long-wave radiative transmission
H_2, fraction of solar energy absorbed in window cavity air stream
QEA, energy balance of airflow in exhaust-air window (J, Btu)

QFR_1, sensible heat content of fresh make-up air (J, Btu)
QFR_2, latent heat content of fresh make-up air (J, Btu)
QRA, energy balance of airflow in return-air window (J, Btu)
QRC, energy needed for treating recycled air (J, Btu)
QREF, energy balance of reference window (J, Btu) RBradiation ratio (transmissivity)
U, overall heat transfer coefficient ($W/m^2 \cdot K$, $Btu/h \cdot ft^2 \cdot F$)

REFERENCES

(1) H. J. Kessler and J.F. Peck, "Architectural Implications of Passive and Hybrid Wall-Mounted Transparent Solar Collectors for Production Houses," Proceedings of the 1980 Annual Meeting of the American Section of the International Solar Energy Society (Newark, DE: American Section of the International Solar Energy Society, Inc., 1980), pp. 734-738.

(2) R. F. Boehm and K. Brandle, "Testing of Air-Flow Windows for Evaluation and Application," Proceedings of the Third Annual Conference on Systems Simulation, Economic Analysis/Solar Heating and Cooling (Reno, NV: The American Society of Mechanical Engineers, Solar Energy Division, 1981), pp. 589-596.

(3) Boehm and Brandle, p. 592.

(4) K. Brandle, and R. F. Boehm, Evaluation of Air-Flow Windows: Final Report (Berkeley, CA: Energy and Environment Division, Lawrence Berkeley Laboratory, University of California, Berkeley, 1981), pp. 97

ACKNOWLEDGMENTS

The work described in this paper was funded by the Office of Buildings and Community Systems, Assistant Secretary for Conservation and Solar Applications of the U.S. Department of Energy and the Environment Division, Lawrence Berkeley Laboratory, University of California, Berkeley.

TABLE I

Transmissivity (RB) for Airflow Windows with White Venetian Blinds at Various Slat Angles to Horizontal Plane or with White Opaque Vertical-Louver Blinds at Various Angles from Normal to Window Plane.

Blind Setting	Transmissivity
Venetian Blind	(RB)
Retracted	0.31
0° slat angle	0.14
30° slat angle	0.10
45° slat angle	0.07
Louver Blind	
Retracted	0.36
0° louver angle	0.14
60° louver angle	0.09

TABLE 2

Monthly Summary Samples for Airflow Windows and Reference Window.

In Btu and (GJ)

QREF[a]	QEA[b] or QRA[c]	QRC[d]	QFR1[e]	QFR2[f]	Total
		Exhaust-air Window January, South, Heat Loss:			
	-0.113×10^6	(-0.119)	-0.404×10^3	-0.113×10^6 (-0.425)	-0.630×10^6 (-0.119)(-0.663)
		October, South, Heat Gain:			
	0.252×10^6 (0.266)		$+0.773 \times 10^3$ (+0.001)		0.253×10^6 (0.267)
		July, West, Heat Gain:			
	0.238×10^6 (0.251)		$+0.378 \times 10^5$ (+0.040)		0.276×10^6 (0.291)
		Return-air Window January, South, Heat Loss:			
	-0.113×10^6 (-0.119)	-0.199×10^5 (-0.021)	-0.303×10^6 (-0.320)	-0.849×10^5 (-0.909)	-0.521×10^6 (-0.550)
		October, South, Heat Gain:			
	0.252×10^6 (0.266)	$+0.264 \times 10^5$ (+0.028)	$+0.580 \times 10^3$ (+0.001)		0.279×10^6 (0.295)
		July, West, Heat Gain:			
	0.238×10^6 (0.251)	$+0.239 \times 10^5$ (+0.025)	$+0.284 \times 10^5$ (+0.030)		0.290×10^6 (0.306)
		Reference Window January, South, Heat Loss:			
-0.309×10^6 (-0.326)			-0.303×10^6 (-0.320)	-0.849×10^5 (-0.090)	-0.697×10^6 (-0.736)
		October, South, Heat Gain:			
0.629×10^6 (0.664)			$+0.580 \times 10^3$ (+0.001)		0.630×10^6 (0.665)
		July, West, Heat Gain:			
0.551×10^6 (0.581)			$+0.284 \times 10^5$ (+0.030)		0.580×10^6 (0.611)

NOTE:
Air flow rate rate: 4 cfm per ft (0.37 m^3/min per m) of window width. Window size: 4 ft X 7 ft (1.22m X 2.13 m). Fresh air rate for return-air and reference windows: 0.75. No latent heat gain component for fresh air QFR2 because of low humidity levels in Salt Lake City.

a. QREF, energy balance of the reference window.
b. QEA, energy balance of the exhaust-air window (energy of exhaust air not considered).
c. QRA, energy balance of the return-air window (energy of return air not considered).
d. QRC, energy needed for treating recycled air.
e. QFR1, sensible heat content of fresh make-up air.
f. QFR2, latent heat content of fresh make-up air.

TABLE 3

Yearly Heat Losses, South.

In 10^6 Btu and (GJ)

	QREF[a]	QEA[b] or QRA[c]	QRC[d]	QFR1[e]	QFR2[f]	Total
At fresh air fraction FR = 1.0						
Exhaust-air Window		-699 (-737)		-2536 (-2676)	-977 (-1031)	-4212 (-4444)
Return-air Window		-699 (-737)		-2536 (-2676)	-977 (-1031)	-4212 (-4444)
Reference Window	-1904 (-2009)			-2536 (-2676)	-977 (-1031)	-5417 (-5716)
At fresh air fraction FR = 0.75						
Exhaust-air Window		-699 (-737)		-2536 (-2676)	-977 (-1031)	-4212 (-4444)
Return-air Window		-699 (-737)	-124 (-131)	-1902 (-2007)	-733 (-773)	-3458 (-3648)
Reference Window	-1904 (-2009)			-1902 (-2007)	-733 (-773)	-4539 (-4789)
At fresh air fraction FR = 0.50						
Exhaust-air Window		-699 (-737)		-2536 (-2676)	-977 (-1031)	-4212 (-4444)
Return-air Window		-699 (-737	-247 (-261)	-1268 (-1338)	-489 (-516)	-2703 (-2852)
Reference Window	-1904 (-2009)			-1268 (-1338)	-489 (-516)	-3661 (-3863)

NOTE:
Window cavity air flow: 4 cfm per ft (0.37 m^3/min per m) of window width. Window size: 4 ft X 7 ft (122m X 2.13 m). Includes January through May and October through December.

a. QREF, energy balance of the reference window.
b. QEA, energy balance of the exhaust-air window (energy of exhaust air not considered).
c. QRA, energy balance of the return-air window (energy of return air not considered).
d. QRC, energy needed for treating recycled air.
e. QFR1, sensible heat content of fresh make-up air.
f. QFR2, latent heat content of fresh make-up air.

TABLE 4

Yearly Heat Gains, South.

In 10^6 Btu and (GJ).

	QREF[a]	QEA[b] or QRA[c]	QRC[d]	QFR1[e]	QFR2[f]	Total
At fresh air fraction FR = 1.0						
Exhaust-air Window		1791 (1890)		+78 (+82)		1869 (1972)
Return-air Window		1791 (1890)		+78 (+82)		1869 (1972)
Reference Window	4512 (4760)			+78 (+82)		4590 (4842)
At fresh air fraction FR = 0.75						
Exhaust-air Window		1791 (1890)		+78 (+82)		1869 (1972)
Return-air Window		1791 (1890)	+182 (+192)	+59 (+62)		2032 (2144)
Reference Window	4512 (4760)			+59 (+62)		4571 (4822)
At fresh air fraction FR = 0.50						
Exhaust-air Window		1791 (1890)		+78 (+82)		1869 (1972)
Return-air Window		1791 (1890)	+264 (+279)	+39 (+41)		2094 (2210)
Reference Window	4512 (4760)			+39 (+41)		4551 (4801)

NOTE:
Window cavity air flow: 4 cfm per ft (0.37 m^3/min per m) of window width. Window size: 4 ft X 7 ft (1.22m X 2.13 m). Calculations are for the entire year. No latent heat gain component is included because of low humidity condition in Salt Lake City.

a. QREF, energy balance of the reference window.
b. QEA, energy balance of the exhaust-air window (energy of exhaust air not considered).
c. QRA, energy balance of the return-air window (energy of return air not considered).
d. QRC, energy needed for treating recycled air.
e. QFR1, sensible heat content of fresh make-up air.
f. QFR2, latent heat content of fresh make-up air.

TABLE 5

Yearly Heat Gains, West.

In 10^6 Btu and (GJ)

	QREF[a]	QEA[b] or QRA[c]	QRC[d]	QFR1[e]	QFR2[f]	Total
At fresh air fraction FR = 1.0						
Exhaust-air Window		1541 (1626)		+78 (+82)		1619 (1708)
Return-air Window		1541 (1626)		+78 (+82)		1619 (1708)
Reference Window	3550 (3745)			+78 (+82)		3628 (3828)
At fresh air fraction FR = 0.75						
Exhaust-air Window		1541 (1626)		+78 (+82)		1619 (1708)
Return-air Window		1541 (1626)	+141 (+149)	+59 (+62)		1741 (1837)
Reference Window	3550 (3745)			+59 (+62)		3609 (3807)
At fresh air fraction FR = 0.50						
Exhaust-air Window		1541 (1626)		+78 (+82)		1619 (1708)
Return-air Window		1541 (1626)	+182 (+192)	+39 (+41)		1763 (1859)
Reference Window	3550 (3745)			+39 (+41)		3589 (3786)

NOTE:
Window cavity airflow is 4 cfm/ft (0.37 m^3/min per m) of window width. Window size: 4 ft X 7 ft (1.22m X 2.13 m). Calculations are for the entire year. No latent heat gain component is included because of the low humidity in Salt Lake City.

a. QREF, energy balance of the reference window.
b. QEA, energy balance of the exhaust-air window (energy of exhaust air not considered).
c. QRA, energy balance of the return-air window (energy of return air not considered).
d. QRC, energy needed for treating recycled air.
e. QFR1, sensible heat content of fresh make-up air.
f. QFR2, latent heat content of fresh make-up air.

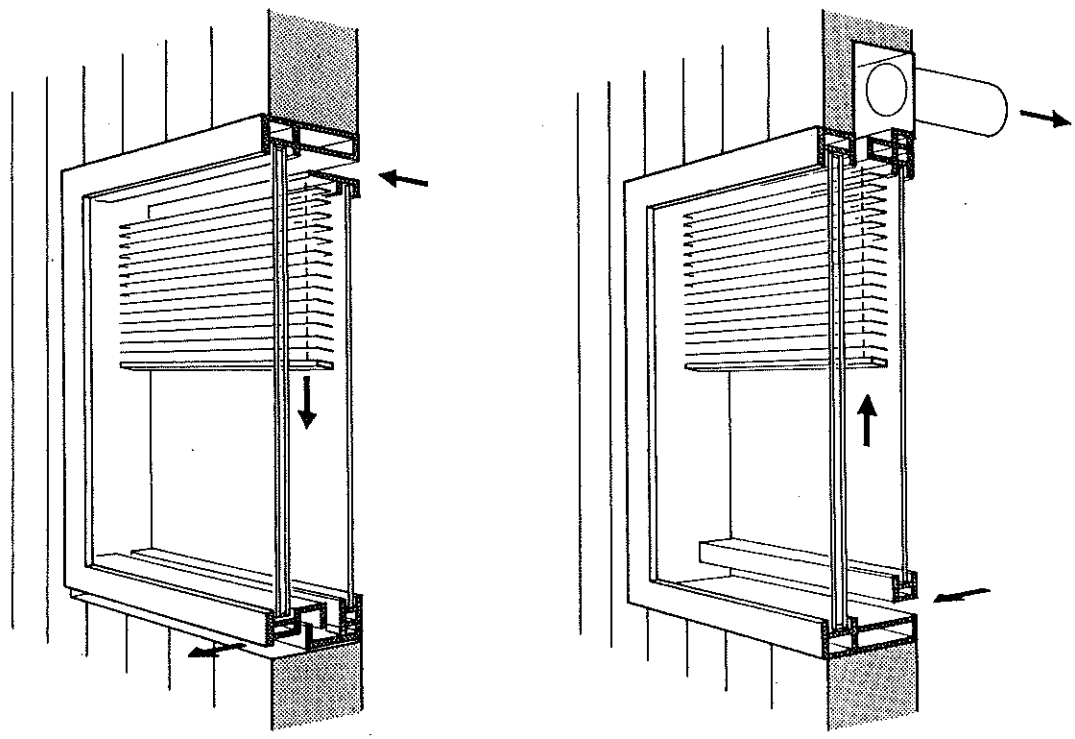

Figure 1. Airflow window types: exhaust-air window (left) and return-air window (right)

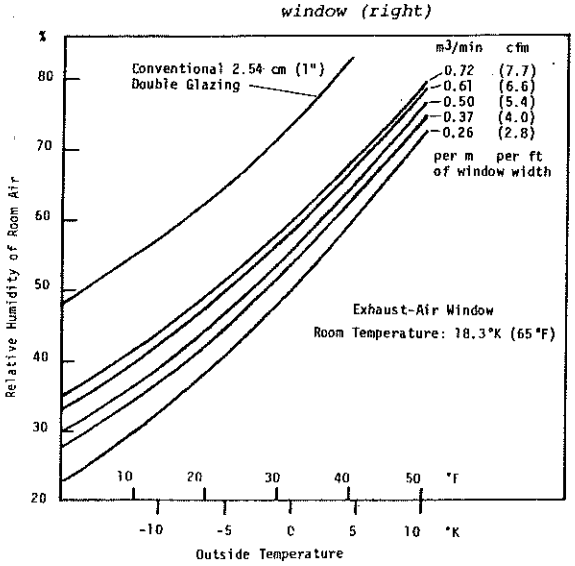

Figure 2. Relative humidity limits of room air above which condensation may occur in window cavity on inside of insulating glass pane related to outside temperatures

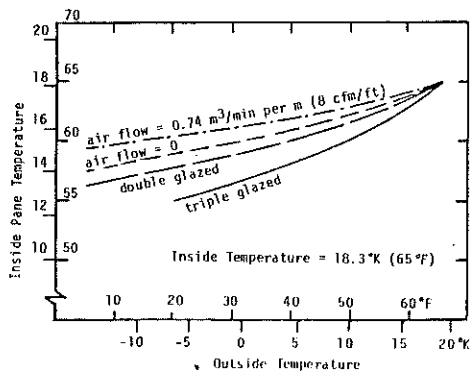

Figure 3. Temperatures of the airflow window inside glass surface related to outside temperature. Inside temperature other than 65°F (18.3°K) can be found by linearly shifting the whole curve

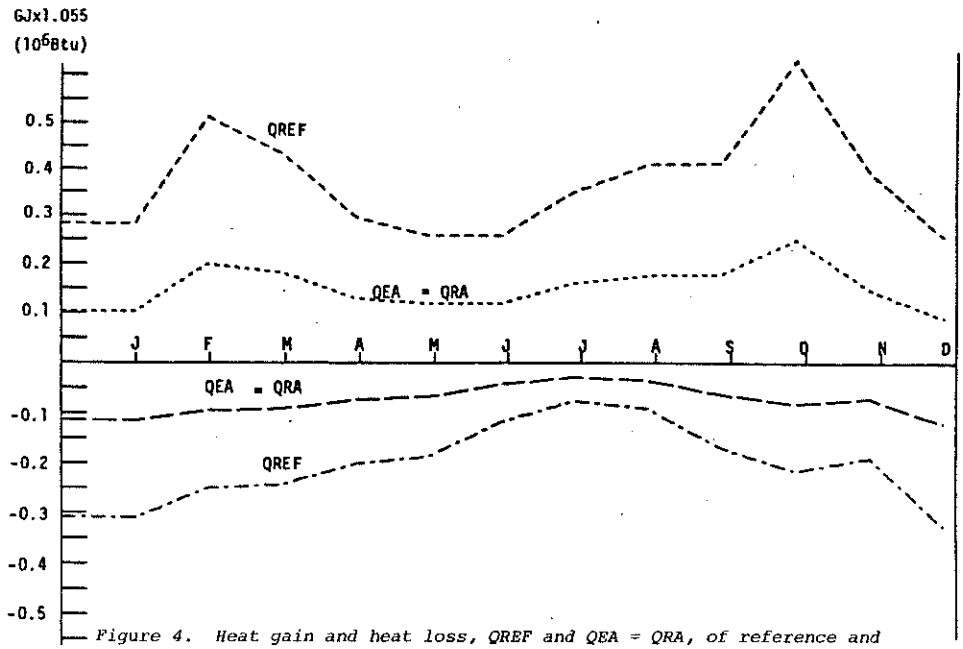

Figure 4. Heat gain and heat loss, QREF and QEA = QRA, of reference and airflow windows with south orientation. Window cavity airflow: 0.37 m^3/min/m of window width (4 cfm/ft). Window size: 4 ft x 7 ft (1.22 m x 2.13 m). In GJ x 1.055 (10^6 Btu)

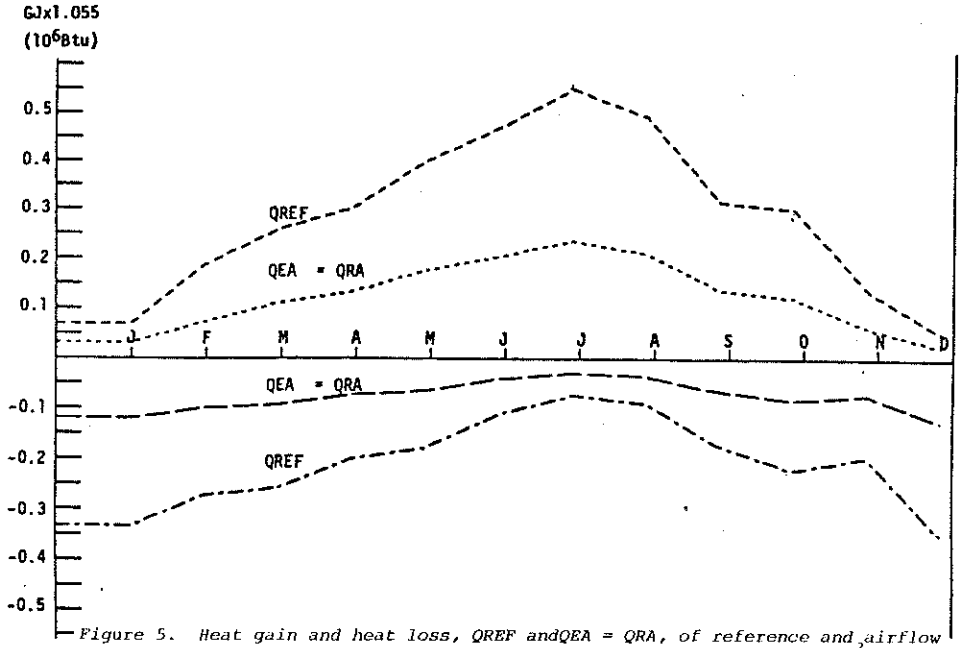

Figure 5. Heat gain and heat loss, QREF andQEA = QRA, of reference and airflow windows with west orientation. Window cavity airflow: 0.37m^3/min/m of window width (4 cfm/ft). Window size: 4 ft x 7 ft (1.22m x 2.13m) In GJ x 1.055 (10^6 Btu)

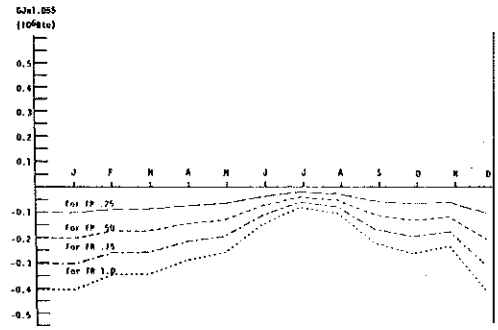

Figure 6. Sensible heating load from fresh air, QFRI, at various fresh air fractions. Window cavity air flow: 4 cfm/ft (0.37 m^3/mim/m) of window width. Window size: 4 ft x 7 ft (1.22 m x 2.13 m). In GJ x 1.055 10^6 Btu)

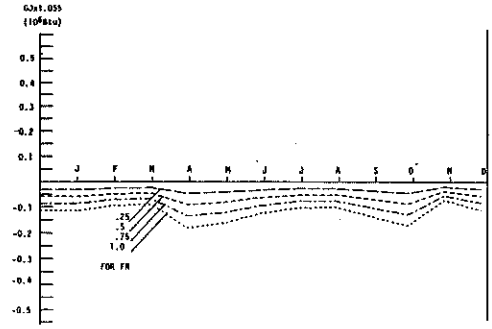

Figure 7. Latent heating load (addition ofmoisture) from fresh air, QFR2, at various fresh air factors. Window cavity airflow: 4 cfm/ft (0.37 m^3/min/m) of window width. Window size: 4 ft x 7 ft (1.22 m x 2.13 m). In GJ x 1.055 (10^6 Btu)

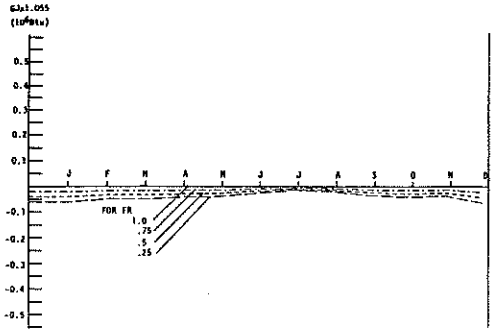

Figure 8. Heating load from recycled air, QRC, at various fresh air fractions, south orientation. Window cavity airflow: 4 cfm/ft (0.37 m^3/min/m) of window width. Sindow size: 4 ft x 7 ft (1.22 m x 2.13 m). In GJ x 1.055 (10^6 Btu)

Figure 9. Kloeckner Office Building, Duisburg, West Germany.

Figure 10. Return-air window system with white vertical louver blinds, Kloeckner Office Building, Duisburg, West Germany.

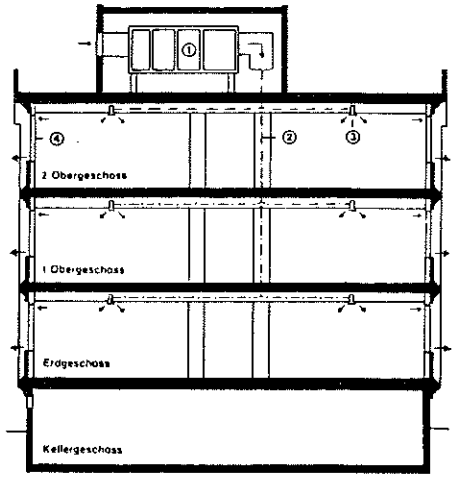

1 central HVAC equipment
2 supply air
3 supply air registers
4 exhaust-air window

Figure 11. Section of Foundry Design Corporation office building, Rapperswil near Aurich, Switzerlan. Supply (only) duct system with exhaust-air windows.

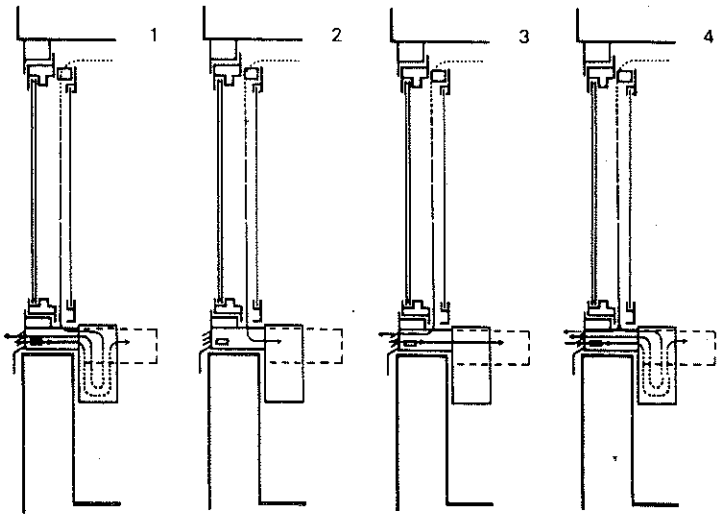

Figure 12. Airflow window with integrated heat recovery unit. Four alternatives of operation: 1) window cavity exhaust air modifies fresh air via heat exchanger, 2) window civity air is returned to space, 3) window cavity air is directly exhausted, fresh air directly admitted, 4) combination of heat exchanger and direct airflow.

Discussion

J.W. Mitchell, University of Wisconsin, Madison: I would think that parasitic power could be important. Are there any estimates of COP or EER that would compare the cooling or heating gains to the fan power required?

K. Brandle: No. This was not part of this research work. It also would be difficult to do in a general way. One would expect different results, for every building system, as each building situation is unique.